INSTRUCTIONS FOR FASTENING THE PANEL AND FOLLOW-UP OF THE DIMENSIONS

FACADE CLADDINGS / LIBERTA RAINSCREEN PANELS
LIBERTA COR-TEN 800

FASTENING OF THE PANEL

The panel is supported on joint pieces CA1SSJ5 attached to support studs CA1SS3. Panel is fastened to the support studs by fastening holes in the middle of the upper flange. Every fastening hole requires a separating piece CA3SP814. The same goes for fastening the CA1SSJ5 to the CA1SS3.
On every joint piece CA1SSJ5 is another separating piece CA3SP800.

FOLLOW-UP OF THE DIMENSIONS

Follow the A-, B-, and groove dimensions.
Check dimensions from the plans!

Panel tolerances: ±1mm (A-, B-, and groove)

Sub frame tolerances horizontal direction:
- For one panel: ±1 mm
- Between each support stud: ±1 mm

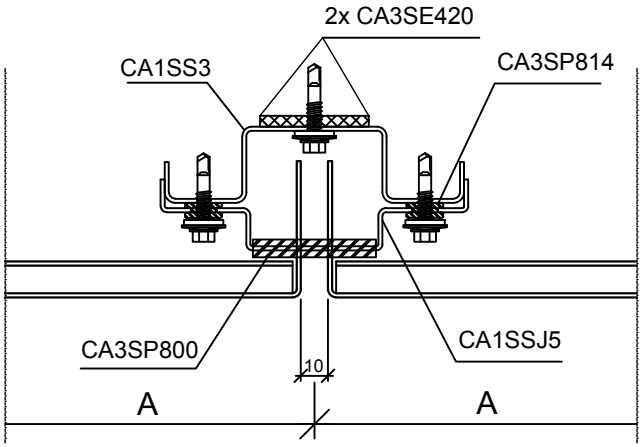

Vertical joint

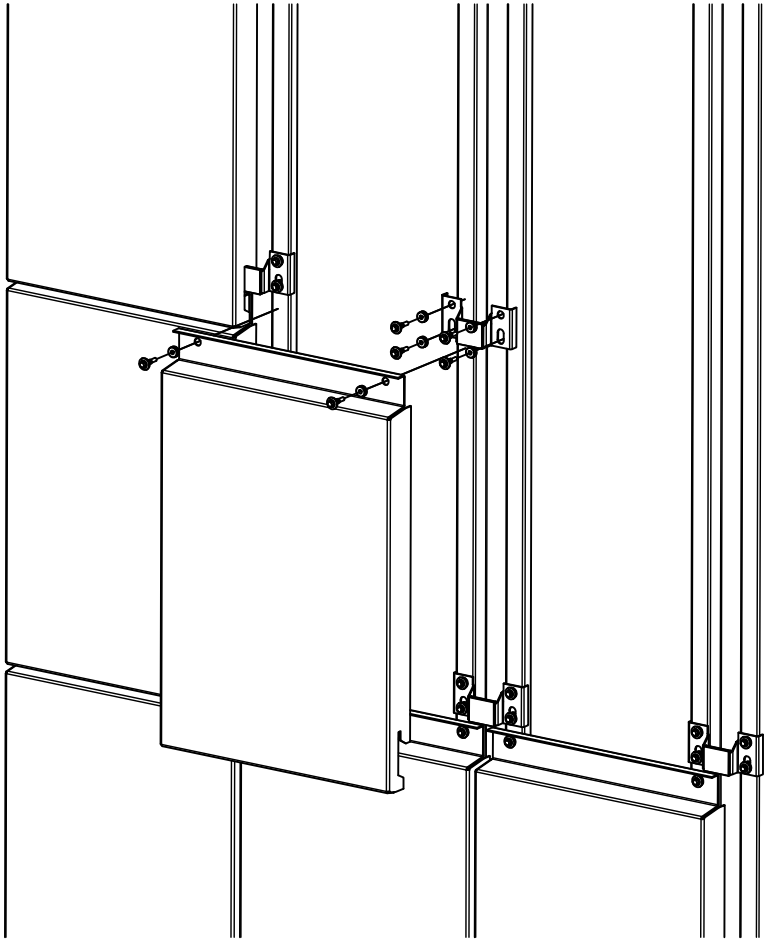

Horizontal joint

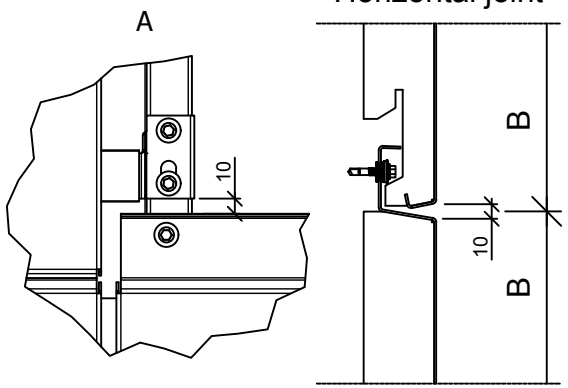
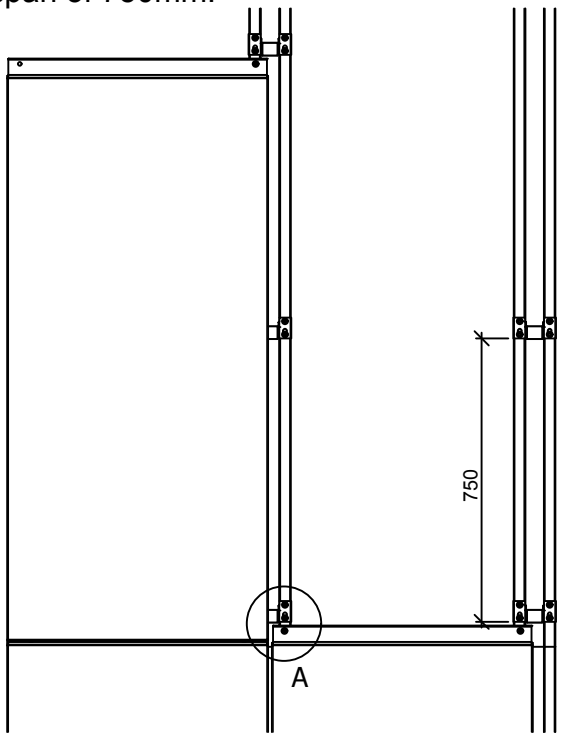
First bracket is 10mm off of the top of the lower panel. Following brackets are with a span of 750mm.